VARIPROP
FEATHERING PROPELLERS

Assembly and operating instructions for the

VARIPROP DF/GP-80 & DF/GP-107

2-, 3- and 4-blade model

SPW GmbH
SAIL PROPELLER- UND WELLENBAU

Dear VARIPROP customer,

Thank you for the trust you have placed in us by purchasing a VARIPROP feathering propeller.

You receive your VARIPROP factory assembled and ready for installation, balanced, greased and with yours custom set pitch.

"Please do not disassemble the VARIPROP, this will void the warranty."

Content

Installation on the shaft 3

Installation on the Saildrive 4

Operation 5

Stepless pitch adjustment „LH“ 6

Stepless pitch adjustment „RH“ 7

Defining and checking the pitch setting 8

Removal from the shaft after short use *(one or two seasons)* 9

Removal from the shaft after long term use *(after 3rd season)* 10

Maintenance and Servicing 11

Instructions for recharging 12

Tightening torques for the propeller nut 13

DNV-GL - Certificate feathering propeller 2021 14

Notes 18

INSTALLATION on the shaft

The VARIPROP is supplied ready for installation and greased at the factory.

The VARIPROP must not be dismantled, otherwise the warranty claim will expire!

Before fitting the VARIPROP onto the shaft, check key and keyway in the propeller hub. Take care that the key is the proper dimension and that the hub slides completely onto the shaft (see below). Remove the zinc anode (2) and the nut (4). Fit the propeller onto the shaft strongly.Tighten the nut (4) with LOCTITE low (pink) onto the shaft (torque-setting see page 11) and secure it with the lock pins (3). Fit the anode (2) with 3 off M5x20 (DIN912). Do not use longer length!

Notice: Lock Pin DF/GP-80 --> M5x16 (DIN914)
Lock Pin DF/GP-107 --> M6x16 (DIN914)

Make sure that the propeller is always protected from electrolytic corrosion by changing the anode (2) latest every year! May not be necessary in freshwater.After the VARIPROP has been fitted properly check that the bladesrotate freely from the forward stop to the reverse stop. The shockabsorber function can be felt ! See servicing page 11.

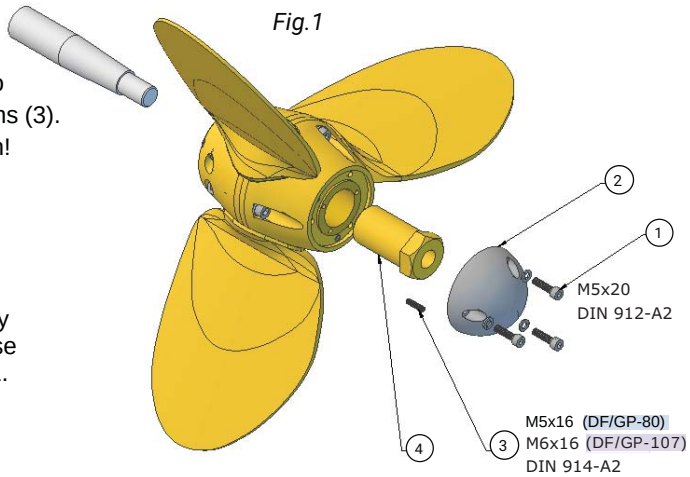

MOUNTING: First slide the prop on the shaft without key. Mark the shaft with a grease-pen at the prop end. After re-fitting the propeller with the key in the keyway on the shaft taper and correctly tightening the fastening nut very strongly (torque-setting see page 11) the mark must no longer be visible. If not, the key is binding and the top orthe sides of the key and must be filed or grind slightly down in width or height to avoid problems such as vibrations! Light must be shining through on the top of the key when looking into the hub from astern. You may have to move your eyevertically to see it.

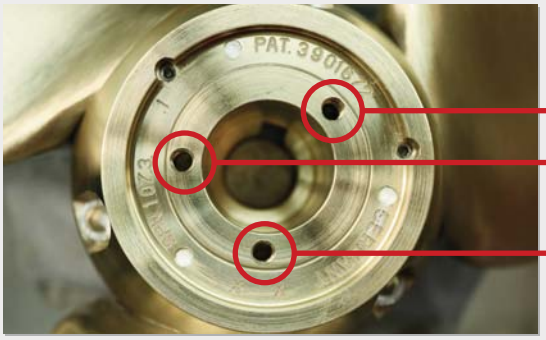

Only two of the three lock-pin holes can be used, depending on the final position of the shaft-nut flange. At least one of the three tapped holes must be used.

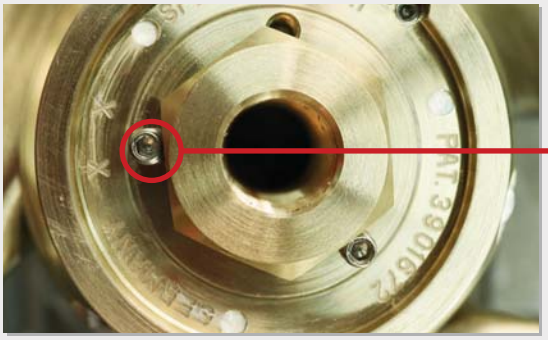

Carefully align the lock-pins (3) straight. They must go in easily. If not, try first to tighten the propnut a little further until they do. If impossible, back off the nut a little. The lock-pins should be hand tightened only. If over tightened they may strip.

Finally screw the zinc cap onto the propeller by using the three screws (1).

Done !

WARNING!

ENGINE DRY TEST: Please consider that the dry test of the engine MUST NOT be done while the VARIPROP is fitted onto the shaft! The VARIPROP needs water pressure on the blades, otherwise the prop could be damaged!!

INSTALLATION on the Saildrive

The VARIPROP is supplied ready for installation and greased at the factory.

The VARIPROP must not be dismantled, otherwise the warranty claim will expire!

Before mounting the VARIPROP properly onto the saildrive spline, please check if the propeller hub gears mate precisely with the saildrive spline grooves. Tolerances are very tight to avoid on-axis movement. Some careful “wiggling” may be required to find the exact position where the hub slides unto the spline. After removal ot the zinc anode (4) and the propeller nut (1) the propeller hub will slide completely unto the spline. Tighten nut (1) strongly (60Nm / 45ft/lb; Yanmar SD 40/50 100Nm / 75ft/lb) and use loctite low (pink).

Observe the recommended torque settings of the Saildrive manufacturer before tighten the prop nut (1).

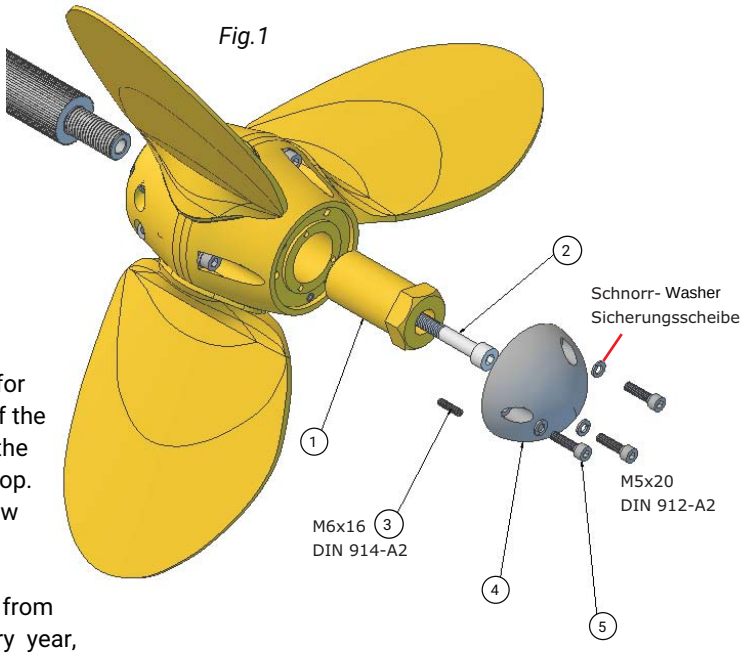

After installation, check that there is only a little end clearance for the prop on the saildrive shaft. If it is too high, fit one or more of the different spacer disc between the forward end of the prop and the saildrive to reduce it. The spacer discs are delivered with the prop. Secure the propeller nut (1) with the hexagonal socket cap screw (2 - M8x45 DF-80 / M8x60 DF-107 / 15Nm / 10ft/lb) and two lock pins (3). Hand tighten only, and then mount the zinc cone (see beside). Make sure that the propeller is always protected from electrolytic corrosion by changing the zinc anode (4) latest every year, less often in fresh water. After the VARIPROP has been fitted properly check that the blades rotate freely from the forward stop to the reverse stop. The shock absorber function can be felt ! See servicing page 11.

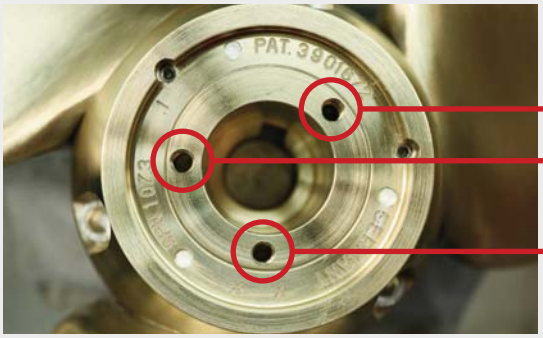

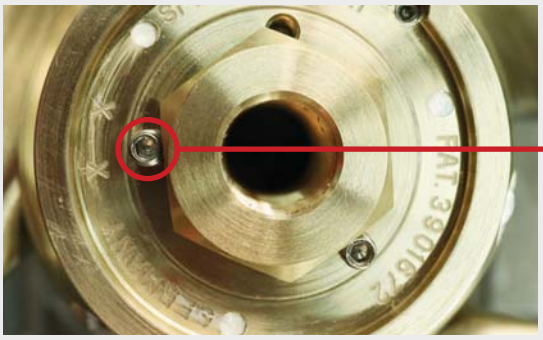

Only two of the three lock-pin holes canbe used, depending on the final positionof the shaft-nut flange.At least one ofthe three tapped holes must be used.

Carefully align the lock-pins (3) straight.They mustgo in easily.If not, try first to tighten the propnut alittle further until they do.If impossible, back off thenut a little.The lock-pins should be hand tightenedonly.If over tightened they may strip.

Finally screw the zinc cap onto the propeller by using the three screws (5).

Done !

The VARIPROP feathers automatically when the shaft rotation is stopped. After engine start-up and shifting into gear the blades will engage in either forward or reverse.

THE BEST WAY TO FEATHER THE PROPELLER IN THE SAILPOSITION IS:

VARIPROP *sailposition*
with mechanical gear-box:

» • Power at 3 to 4 knots in forward.

» • Stop the engine and engage the transmission in reverse to stop the freewheeling of the shaft.

VARIPROP *sailposition*
with hydraulic transmission:

» • Power at 3 to 4 knots in forward.

» • Stop the engine while still engaged in forward. The remaining oil pressure of the transmission will stop spinning the shaft to feather the blades in the sail-position.

If the propeller is not feathered in the sailposition the shaft will freewheel like with a fixed propeller.
In that case start the engine again and repeat the steps above.
Once the prop is feathered , it is better to shift the transmission to neutral.

DO NOT stop the engine while it turns in reverse. In this case the blades will stay in the reverse position and will not feather. You can actually use this feature to drive a shaft generator

TROUBLE SHOOTING: If the propeller does not work in forward or reverse go systematically through the points below:

» • Check low idle of the engine. It should be 800 to 900 rpm in idle.

» • Check shifting movement of the transmission lever. Make sure that the shifting travel is not too short. The amount of lever travel, as measured at the pivot point of the actuating lever, between the neutral position and end positions for forward and reverse can be found in in the owners manual of your transmission. A larger amount of lever travel is in no way detrimental.

» • Check the clutch discs of the transmission. They could be worn out.

» Make sure that the VARIPROP is always sufficiently filled with ours special EP/SAL grease.
(available by SPW only!)

WARNING: It is important to observe the following when using the VARIPROP in order to avoid unnecessary damage and ensure a long service life:

» When going from ahead to astern or the opposite, it is necessary to idle down and shift at low rpm's (max.1200rpm) between gears to allow smooth reversing of rotation without binding. This will substantially lengthen the service life of your propeller gears. When going from ahead to astern or the opposite, you can hear the turning-noise of the feathering blades. This is normal and not a problem or a defect of your VARIPROP.

» The propeller body must always be completely filled with a high viscosity grease. We recommend synthetic grease typ TW.2 GEL or mineral multi-purpose grease EP/SAL (see servicing page 11)

» The propeller must be protected from electrolytic corrosion by fitting the usual zinc anodes on the shaft plus the prop anode. We recommend the replacement of the anode once a year.

» If you want to protect your VARIPROP with Antifouling, use only Antifouling which needs a primer first.Otherwise chemical interaction and decomposition could occur. Our recommendation is Jotun Aqualine Spray including a primer (offers also protection against electrolyses), available from your VARIPROP distributor.

» Never dismantle the VARIPROP yourselves !!
Disassembly and reassembly require special tools and technical know-how only available at the factory or their approved service centres.

PITCH ADJUSTMENT „LH“

GENERAL: The pitch adjustment is very simple on the VARIPROP, and can be done in or out of the water in matter of few minutes, if a there is enough space between propeller hub and strut to fit an allen key into the set screws (1) & (3) at Fig.2 . If not, the propeller must first be pulled. (see removing from the shaft page 9 and 10)

Propeller in the drawing below (Fig.2) is for a left hand rotation VARIPROP „LH“.

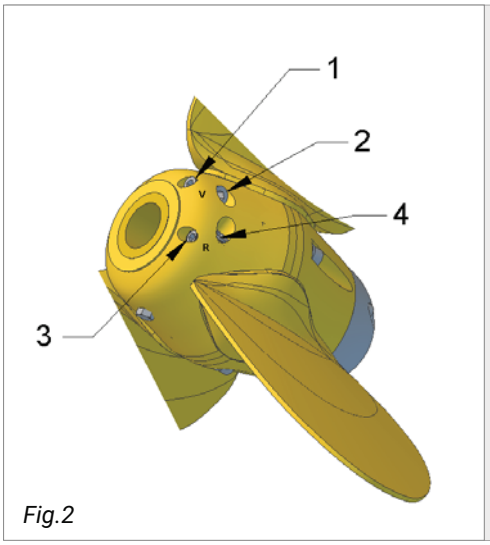

Fig.2

R= AS (Astern) / reverse

adjustment markings
Markings to check and determine degree of pitch adjustment

V= AH (Ahead) / forward

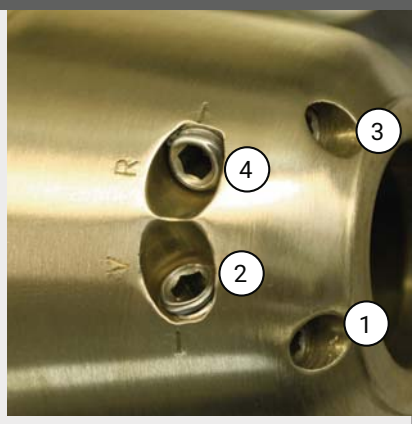

adjusting screws **(2 & 4)**
set screws **(1 & 3)**

The following description refers to the view towards astern for a **left hand** VARIPROP.

A. Adjusting the forward pitch:

1. Remove the set screw **(1)** (1/4mm allen key)
   Under water: only 3 turns loosen
2. Turn the adjusting screw **(2)**, which is marked as “V” (=ahead) with the 5mm Allen-key as follows:

   2a. Increasing of pitch approx. 3“ max.:

   » Turn the adjusting screw **(2)** clockwise.
   (see “NOTE” and page 8)

   » Secure set screw **(1)** with LOCTITE-Low (pink).
   Lock set screw strongly.

   2b. Reducing of pitch approx. 2“ max.

   » Turn the adjusting screw **(2)** anti-clockwise.
   (see “NOTE” and page 8)

   » Secure set screw **(1)** with LOCTITE-Low (pink).
   Lock set screw strongly.

B. Adjusting the reverse pitch:

1. Remove the set screw **(3)** (1/4mm allen key)
   Under water: only 3 turns loosen
2. Turn the adjusting screw **(4)**, which is marked as “R” (=astern) with the 5mm Allen-key as follows:

   2a. Increasing of pitch approx. 2“ max.:

   » Turn the adjusting screw **(4)** anti-clockwise.
   (see “NOTE” and page 8)

   » Secure set screw **(3)** with LOCTITE-Low (pink)
   Lock set screw strongly.

   2b. Reducing of pitch approx. 3“ max.

   » Turn the adjusting screw **(4)** clockwise.
   (see “NOTE” and page 8)

   » Secure set screw **(3)** with LOCTITE-Low (pink).
   Lock set screw strongly.

Required tool for pitch adjustment see page 12 (Tightening torques)

NOTE: It is quite possible to set the pitch continuously variable and independently for forward and reverse. Turning of the adjusting screws **(2)** and **(4)** by half a revolution (180°) changes the pitch approx. 1“. This will change the engine revolution by approx.200.

PITCH ADJUSTMENT „RH“

GENERAL: The pitch adjustment is very simple on the VARIPROP, and can be done in or out of the water in a matter of few minutes, if there is enough space between propeller hub and strut to fit an Allen key into the set screws (1) & (3) at Fig 3a. If not, the propeller must first be pulled. (see removing from the shaft page 9 and 10)

Propeller in the drawing below (Fig.3a) is for a right hand rotation VARIPROP „RH“.

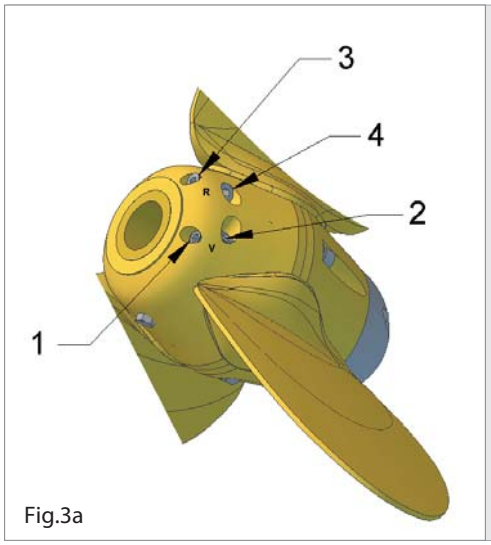

Fig.3a

R= AS (Astern) / reverse

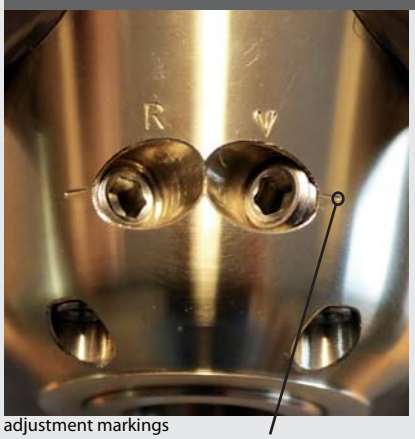

adjustment markings
Markings to check and determine degree of pitch adjustment

V= AH (Ahead) / forward

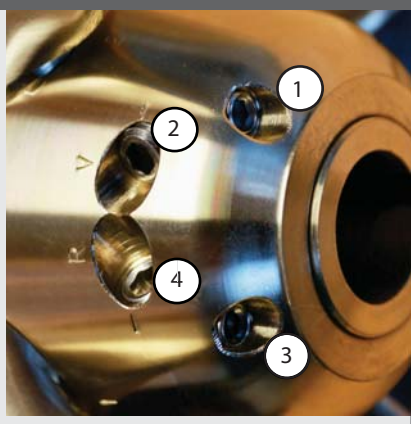

adjusting screws **(2 & 4)**
set screws **(1 & 3)**

The following description refers to the view towards astern for a **right hand** VARIPROP

A. Adjusting the forward pitch :

1. Remove the set screw **(1)** (1/4mm allen key).
   Under water: only 3 turns loosen.
2. Turn the adjusting screw **(2)** which is marked as “V” (=ahead) with the 5mm Allen-key as follows:

2a. Increasing of pitch approx. 3“ max.:

» Turn the adjusting screw **(2)** clockwise.
(see “NOTE” and page 8)

» Secure set screw **(1)** with LOCTITE-Low (pink)
Lock set screw strongly.

2b. Reducing of pitch approx. 2“ max.

» Turn the adjusting screw **(2)** anti-clockwise.
(see “NOTE” and page 8)

» Secure set screw **(1)** with LOCTITE-Low (pink).
Lock set screw strongly.

B. Adjusting the reverse pitch:

1. Remove the set screw **(3)** (1/4mm allen key).
   Under water: only 3 turns loosen.
2. Turn the adjusting screw **(4)** which is marked as “R” (=astern) with the 5mm Allen-key as follows:

2a. Increasing of pitch approx. 2“ max.:

» Turn the adjusting screw **(4)** anti-clockwise.
(see “NOTE” and page 8)

» Secure set screw **(3)** with LOCTITE-Low (pink)
Lock set screw strongly.

2b. Reducing of pitch approx. 3“ max.

» Turn the adjusting screw **(4)** clockwise.
(see “NOTE” and page 8)

» Secure set screw **(1)** with LOCTITE-Low (pink).
Lock set screw strongly.

Required tool forpitch adjustment seepage 12 (Tightening torques)

NOTE: It is quite possible to set the pitch continuously variable and independently for forward and reverse. Turning of the adjusting screws (2) and (4) by half a revolution (180°) changes the pitch approx.1“.This will change the engine revolution by approx.200.

Defining and checking pitch adjustments

It is quite possible to set the pitch continuously variable and independently for forward and reverse. The turning of the adjusting screws **(2)** & **(4)** in Figure 2 & 3a (see pages 5&6) by half a revolution changes the pitch approx. 1“. That means a quarter turn (90°) changes the pitch by ½” and a one full turn by 2” etc.. For a check of pitch adjustments there are markings on the hub face under the zinc anode. To return to original factory pitch settings, line up “AH” or “V” resp. “AS” or “R” markings on the hub face.

Example for ahead:

Check adjustments ahead!
Marked with „ V “ !

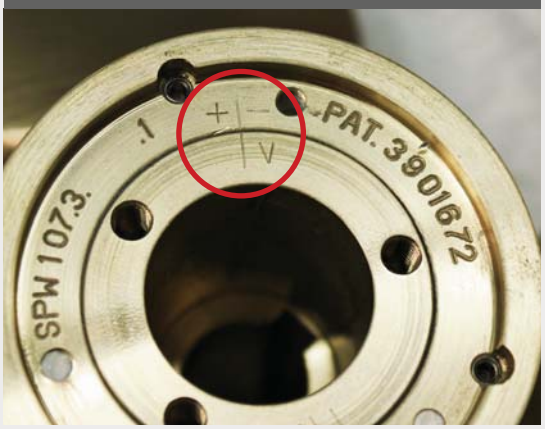

original factory pitch setting :
markings line up

The example shows adjustment of +1"

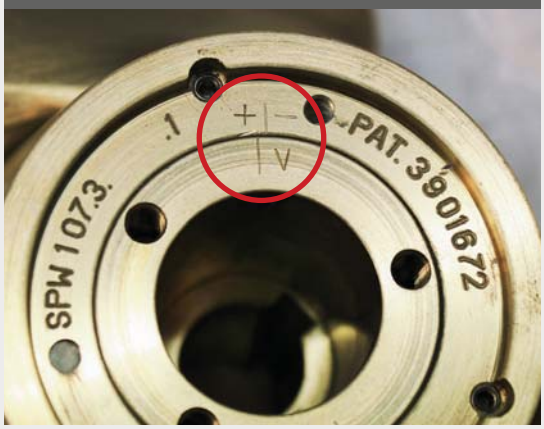

pitch has been increased ahead

Example for ahead:

Check adjustments astern!
Marked with „ R “ !

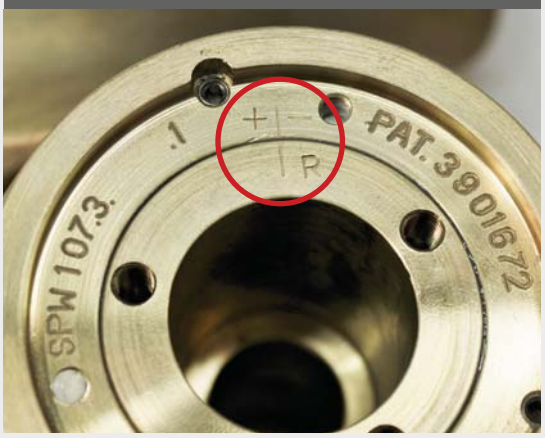

original factory pitch setting :
markings line up

The example shows adjustment of -1"

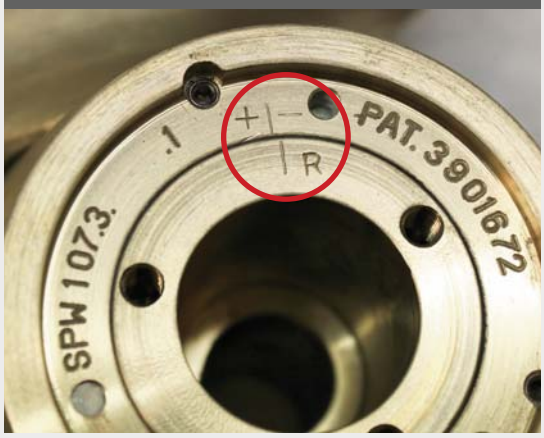

pitch has been decreased astern

Note:

» If the engine does not reach the desired RPM reduce the pitch.

» If the engine exceeds the desired RPM increase the pitch.

» 1” of pitch reduction / increase results in approx. 200 engine revolutions increase / reduction.

VARIPROP removal after 1 or 2 seasons.

1. In order to remove the VARIPROP you must first remove the zinc anode **(2)**.
2. Remove both lock pins **(3)** and the prop nut **(4)**

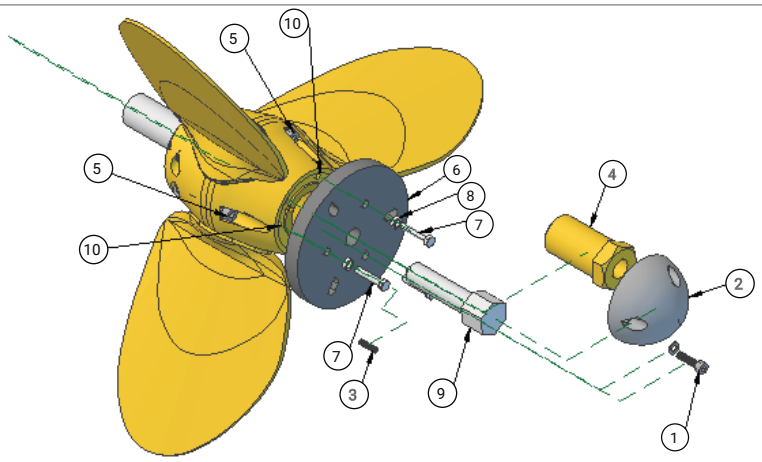

Fig.3

3.) Fit the short hexagonal head screws (7) into the inner bolt circle diameter of the puller (6). Fit the SPW puller (6) onto the aft of the rear boss and screw the short hexagonal head screws (7) completely into the zinc screw holes (10). Take care that plate (6) will fit snugly and evenly to the aft boss.

CAUTION!

DO NOT OPEN THE HEXAGON SOCKET SCREWS (5) !
It would dismantle the two separate halves of the VARIPROP hub !!!

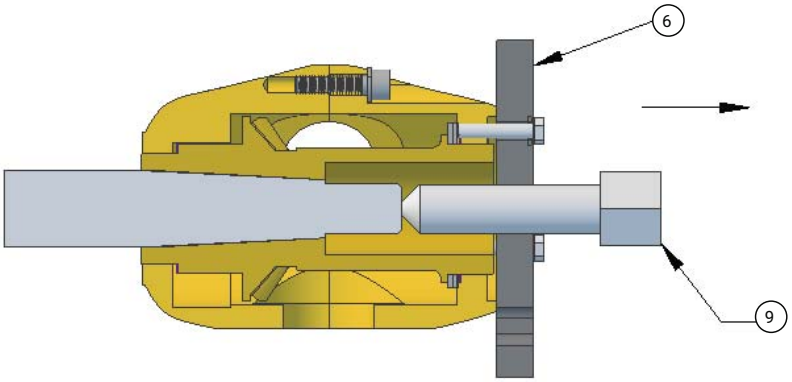

Fig.4

4. Now turn the hexagonal head bolt (9) against the end of shaft until the VARIPROP comes off the taper. Do not use excessive force to turn bolt (9). If prop does not come off, proceed to page 10 –> removal after the 3rd season. Never use a hammer to remove the prop from the taper !!!

CAUTION: The VARIPROP should NOT be dismantled into its individual parts! The correct assembly requires special knowledge and special tools.

We highly recommend the use of above described special puller, available from your VARIPROP dealer.
Standard 3-prong pullers can easily slip and damage the rounded VARIPROP housing !

VARIPROP REMOVAL from the shaft

VARIPROP removal after 3 years or more.

1. In order to remove the VARIPROP you must first remove the zinc anode **(2)**.
2. Remove both lock pins **(3)** and the prop nut **(4)**

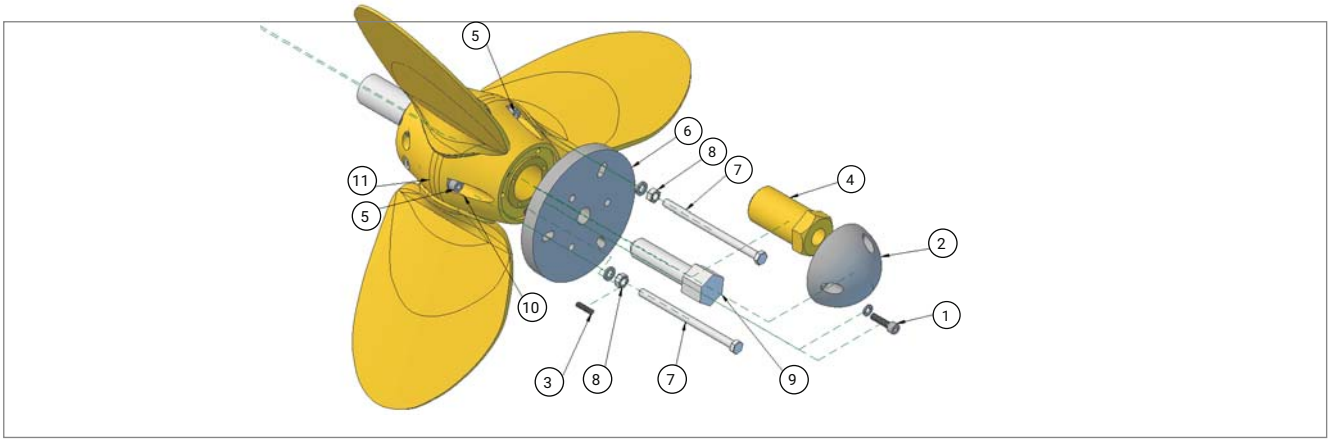

3. Then remove at first only two hexagonal socket screws (5). **DO NOT OPEN ALL!!**

Do not remove all housing screws (5) at the same time, but loosen one after the other and immediately secure one after the other with the long screw of the puller so that the VARIPROPhub-housing remains together.

4. Fit two of the long hexagonal head screws (7) into the outer bolt circle diameter of the puller (6).
   Now fit the SPW puller (6) onto the aft of the rear boss and screw the long hexagonal head screws (7) completely into the screw holes (11) of the front boss halve (10). Tighten the nut (8) on the head screws (7) until the plate (6) is fitted snugly and evenly to the aft boss. CAUTION: Do not dismantle the two separate halves of the VARIPROP hub !!! In this mode remove the last hexagonal socket screw (5) as well and fit the third long hexagonal head screw. Take care that plate (6) will fit snugly and evenly to the aft boss.

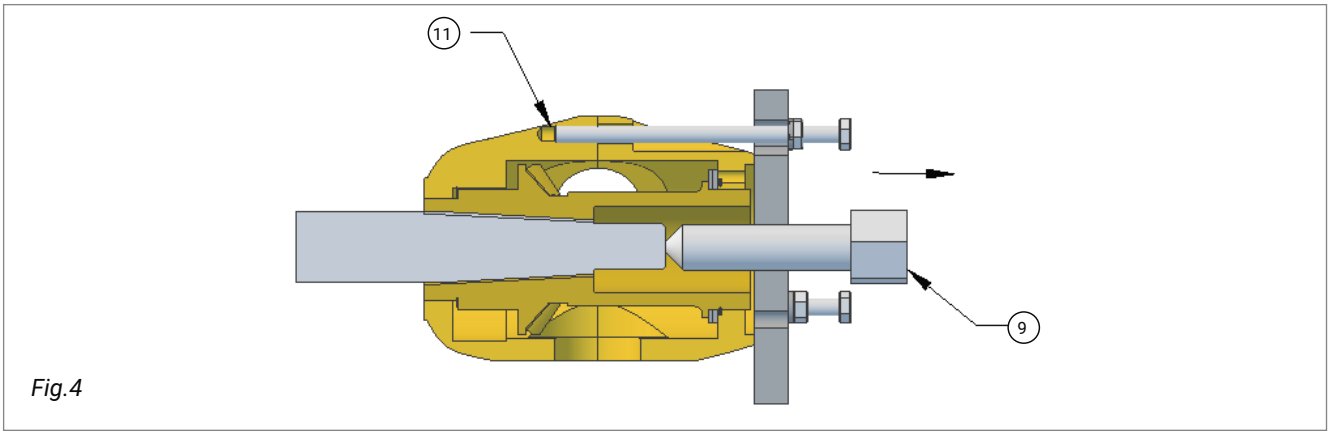

Fig.4

5. Now turn the hexagon head bolt (9) against the end of shaft until the VARIPROP comes off the taper. Never use a hammer to remove the prop from the taper !!!

6. At the end remove the puller (6) carefully and secure the boss halves (10) with the socket screws (5). Tighten strongly with LOCTITE blue (medium). Take care that the hub halves do not come apart when removing the hexagonal head srews (7).

CAUTION: The VARIPROP should NOT be dismantled into its individual parts!
The correctassembly requires special knowledge and special tools.

We highly recommend the use of above described special puller, available from your VARIPROP dealer.
Standard 3-prong pullers can easily slip and damage the rounded VARIPROP housing !

Important note:

We explicitly point out that the following spare parts may only be installed as original SPW parts:

anodes - screws - locking screws and EP/SAL special grease

This concerns in particular the installation of the anodes. Non-original SPW anodes lead to malfunctions!

ANY WARRANTY IS VOID!

The VARIPROP needs to be greased a minimum of once a year. The VARIPROP body should always be completely filled with a high viscosity grease of a hydrophobic nature. Remove the cap screw (5) and screw in the lubricating nipple which is supplied with the tools. Further remove the zinc anode! With each pump of the grease gun rotate the propeller from forward stop to reverse stop to allow the grease to work through the propeller. Stop to pump when enough grease comes out of the anode drill holes on top of the prop.

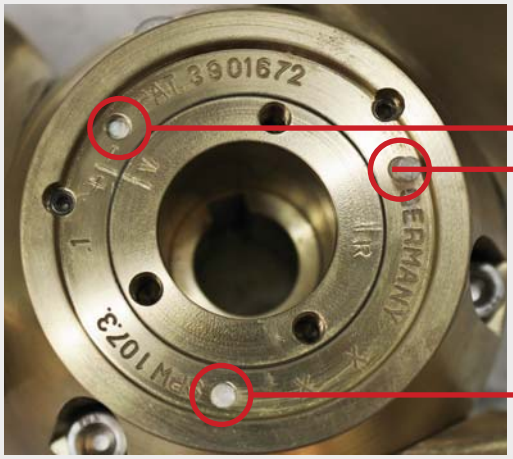

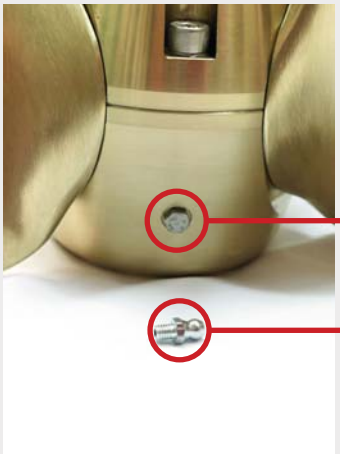

Factory supplied special grease EP/SAL is recommended and available from your VARIPROP distributor. Avoid regular white grease (sterntube-grease) !

Shock-absorber: The integrated shock-absorber reduces unpleasant operating noises. The pitch stops are substantially protected against wear. At rotating the blades by hand, you can feel the shock-absorber function. This “heavy” turning at the absorber area is normal and necessary for the function !

Make sure that you always keep the zinc anode in good condition. The VARIPROP must be protected by a lot of zinc, so also use a zinc anode onto the shaft if possible. Use fine sandpaper to clean the aft of the end boss and the forward face of the VARIPROP-anode to give the zinc good contact with the propeller

INSTRUCTION FOR USING A VARIPROP FOR RECHARCHING (shaft drive)

NOT suitable for saildrive drives!

-» Go ahead and initiate the setting of sails.

-» After the sails are set, walk in the wind and stop the ship.
Please make sure that a maximum speed of 4-5 knots is not exceeded.
In this way you avoid unwanted damage to the drive system (shaft unit; gear box, etc.)

-» Now switch the engine (gearbox) to reverse to stop the boat.

-» With 2.5 - 3 kn forward speed go into the "neutral position" and switch off the motor.
Make sure that the engine (gearbox) is not returned to the forward position before switching off.

-» After the engine is turned off, you go by the wind and pick up speed. Check whether the shaft is spinning.

»» Now the regeneration can be started.

Stop of recharging

To avoid consequential damage to the drive system make sure that you don't drive too fast in ahead during this manoeuvre!

-» Go into the wind and reduce the sailing speed to below 4 knots!

-» Make sure that the gearbox is in the "neutral" position while you start the engine.

-» Now engage into forward gear at the slowest possible ship speed (below 4kn).

-» The VARIPROP moves from its reverse position to the forward position. Now you can resume sailing and stop the engine. When the engine is switched off, the gear can be engaged in reverse (with mechanical gearbox), to stop the shaft from spinnig. The VariProp feathers into the sailing position. For hydraulic transmission see also chapter "Use" in the installation and operating instructions for the VariProp (page 5).

The VARIPROP can only be used to a limited extend for a successful recharging.
As a rule, the boat speed should be over 12 knots or more in order to achieve a reasonably satisfactory energy yield.

TORQUE SETTINGS FOR PROP-NUT

(see page 3, Fig. 1,part no. 4)

Standard – thread	
M 14 x 2 UNC 1/2 " -13	40 Nm
M 16 x 2 BSW 5 / 8 " - 11 UNC 5 / 8 " - 11	60 Nm
M 16 x 2 Für Yanmar Saildrive SD 20 und SD 31 und für alle Volvo Saildrive	60 Nm - 70 Nm
M 20 x 2,5 BSW 3 / 4 " - 10 UNC 3 / 4 " - 10	125 Nm
UNC 7 / 8 " - 9	160 Nm
M 24 x 3 BSW 1 " - 8 UNC 1 " - 8	210 Nm

Fine – thread	
M 14 x 1,5 BSF 1/2 " - 16	40 Nm
M 16 x 1,5 BSF 5 / 8 " - 14 UNC 5 / 8 " - 18	70 Nm
M 20 x 1,5 BSF 3 / 4 " - 12 UNC 3 / 4 " - 16	135 Nm
M 20 x 2 Für Yanmar Saildrive SD 40 und SD 50	100 Nm - 120 Nm
M 24 x 2 BSF1 " - 10 UNF 1 " - 12	225 Nm

Tools supplied with each VARIPROP

Service Tools DF/GP-80 (Fig.1):

»» 1 small plastic bottle with Loctitelow (pink)

»»1 grease nipple 5mm

»»1 allen key 2 mm

»»1 allen key 4 mm

»»1 allen key 5 mm

Service Tools DF/GP-107 (Fig.1):

»» 1 small plastic bottle with Loctitelow (pink)

»» 1 grease nipple 5mm

»» 1 allen key 3 mm

»» 1 allen key 4 mm

»» 1 allen key 5 mm

extra for Saildrive (Fig.1/p.4)

»» 1 allen key 6 mm for socket cap screw (2)

Service tool for Pitch Adjustment DF/GP-80 (Fig.2/3a):

»»1 allen key 4 mm

Service tool for Pitch Adjustment DF/GP-107 (Fig.2/3a):

»» 1 allen key 5 mm

+ necessary tools for removing the prop after 1 or 2 seasons (page 9)

for DF/GP-80:

»»1 open-end- / box spanner 8mm

»»1 open-end- / box spanner 32mm

»»1 allen key 2 mm

»»1 allen key 4 mm

for DF/GP-107:

»» 1 open-end- / box spanner 8mm

»» 1 open-end- / box spanner 36mm

»» 1 allen key 3 mm

»» 1 allen key 4 mm

+ necessary tools for removing the prop after 3 years (page 10)

for DF/GP-80:

»»1 open-end- / box spanner 32mm

»»1 open-end- / box spanner 13mm

»»1 allen key 2 mm

»»1 allen key 4 mm

»»1 allen key 5 mm

for DF/GP-107:

»» 1 open-end- / box spanner 36mm

»»1 open-end- / box spanner 13mm

»»1 allen key3 mm

»» 1 allen key 4 mm

»»1 allen key 6 mm

DNV·GL

Certificate No:
TAM000017G

TYPE APPROVAL CERTIFICATE

This is to certify:

That the Controllable Pitch Propeller

with type designation(s)
Feathering Propeller series VP, GP, DF

Issued to
S.P.W. GmbH Sail Propeller- und Wellenbau
Bremerhaven, Germany

is found to comply with
DNV GL rules for classification – Ships
DNV GL rules for classification – Yachts
DNV GL rules for classification – High speed and light craft

Application :

Product(s) approved by this certificate is/are accepted for installation on all vessels classed by DNV GL.

Issued at **Hamburg** on **2021-02-16**

for **DNV GL**

This Certificate is valid until **2026-02-15**.
DNV GL local station: **Hamburg – CMC North/East**

Approval Engineer: **Olaf Richter**

Olaf Drews
Head of Section

This Certificate is subject to terms and conditions overleaf. Any significant change in design or construction may render this Certificate invalid. The validity date relates to the Type Approval Certificate and not to the approval of equipment/systems installed.

LEGAL DISCLAIMER: Unless otherwise stated in the applicable contract with the holder of this document, or following from mandatory law, the liability of DNV GL AS, its parent companies and subsidiaries as well as their officers, directors and employees ("DNV GL") arising from or in connection with the services rendered for the purpose of the issuance of this document or reliance thereon, whether in contract or in tort (including negligence), shall be limited to direct losses and under any circumstance be limited to 300,000 USD.

© DNV GL 2014. DNV GL and the Horizon Graphic are trademarks of DNV GL AS.

Product description

Feathering propellers

Application/Limitation

For sailing ship propulsion.

Type	Blades	Propeller diameter max. [mm]	Engine power max. [kW]	Propeller torque max. [Nm]	Propeller speed max. [rpm]
VP-64	2, 3	455	22	150	1400
VP-76	2, 3	560	55	375	1400
VP-104	3	660	82	653	1200
DF-80, GP-80	2, 3, 4	432	22	150	1400
DF-107, GP-107	2, 3, 4	508	59	402	1400
DF-112, GP-112	3, 4	635	88	700	1200
DF-128	3, 4	715	103	894	1100
DF-140	3, 4	762	132	1261	1000
DF-160	3	864	202	2030	950
DF-180	3	914	257	2727	900
DF-190	4	864	202	2030	950
DF-210	4	914	257	2727	900
DF-230	3	1016	308	3676	800
DF-260	4	1016	308	3676	800
DF-280	3	1270	404	5144	750
DF-310	4	1270	404	5144	750
DF-380	4	1575	550	12500	750

Type Approval documentation

Drw No	Rev	Title	Status
-	2020-11-21	Drawing list VP64	DI Discarded**
-	2020-11-21	Drawing list GP112	DI Discarded**
-	2010-01-19	Document List of VariProfile	DI Discarded**
-	-	DF-380 part list	DI Discarded**
-	-	Material data propeller hub	FI For Inf.
-	-	Propeller assembly	DI Discarded**
-	-	Variprofile Broschüre	DI Discarded**
-	2020-11-21	Drawing list VP76	DI Discarded**
-	-	Blade sections DF-xx 12-50"	AP Approved
-	-	Variprop brochure	DI Discarded**
-	-	Assembly drawings + blade sections DF-xx	AP Approved
Anode DF-380	01	Anode DF-380	DI Discarded**
Anode VP104-02	01	Anode VP-104	DI Discarded**
Anode VP64-02	04	Anode / VP-64	DI Discarded**
Anode VP76-02	02	Anode / VP-76	DI Discarded**
Anschlag 104-RH-04	06	Anschlag VP-104 3 Blatt	AP Approved
Anschlag VP64-04	08	Anschlag VP-64	AP Approved
Anschlag VP76-04	06	Anschlag v2.1 VP-76	AP Approved
Assembly DF-380-4bl-00	00	Assembly DF-380	AP Approved

Assembly Exploded_VP76-2bl-04	06	Assembly VP-76 v3.0/GL	AP Approved
Assembly FlgDF-380-50-00	00	Flügel DF-380	FI For Inf.
Assembly_Exploded VP-104-3bl-03	03	Assembly VP-104	AP Approved
Assembly_Exploded-GP-107-3bl	-	Assembly_Exploded GP-107-3blade-19	AP Approved
Assembly_VP64-04_exploded-01	12	Assembly VP-64 v3.0/GL	AP Approved
Assembly-1 DF-380-50-00 sh.1	00	Assembly DF-380	AP Approved
Assembly-2 DF-380-50-00 sh.2	00	Assembly DF-380	AP Approved
Assembly-3 DF-380-50-00 sh.3	00	Assembly DF-380	AP Approved
Assembly-GP-80-3bl	-	Assembly_Exploded-GP-80-3bl	AP Approved
Connect-plate-05	07a	Connecting Plate v3.0/GL VP-64	AP Approved
Connect-plate-VP104-04	04/GL	Connecting Plate VP-104	AP Approved
Connect-plate-VP76-05	07a	Connecting plate v3.0/GL VP-76	AP Approved
DF380_Flg-62-00-flat	2008-07-09	DF380_Flg-62-00 VariProp symm. section	AP Approved
DIN 913 - M30 x 120	00	Steigungsverstellschraube DF-380	FI For Inf.
FlgDF_schnitt-380-62-00	-	Flügelschnitt DF-380/48-62"	AP Approved
FlgDF-80GP-16	01	Flügel DF-80&107-GP/Serie	AP Approved
FlgGP-112-20-06a-flat	01	Flügel DF-112SE Vers.GP	AP Approved
FlgGP-112-20-06a-flat	-	Flügel DF-112_GP	AP Approved
FlgSchnitt-GP-112-20_24-01	2020-02-13	Flügelkontur DF-112 / dia. 20-24"	AP Approved
FlgVerzGP-112-01	01	Flügel-Zahnrad GP-112	AP Approved
Flg-VP104-Schnitt-26-00	00	Flügelschnitt VP-104 26"	AP Approved
Flg-VP104-Schnitt-26-01	00	Flügelschnitt VP-104 26"	AP Approved
GearAc_1818-04aRH	07	Nabenverzahnung VP-64 v3.0/GL	AP Approved
GearAc_2424-04RH	04	Nabenverzahnung VP-76 v3.0	AP Approved
GearAc_2727-03RH	03	Nabenverzahnung VP-104	AP Approved
GearPas_1818-02aLH	06	Flügelverzahnung VP-64 v3.0/GL	AP Approved
GearPas_2424-03LH	05	Flügelverzahnung VP-76 v3.0	AP Approved
GearPas_2727-01LH	03a	Flügelverzahnung VP-104	AP Approved
Geob104-3bl-00	01	VP-104 3 Blatt Gehäuse Oberteil	AP Approved
Geob112_GP-3bl	00	DF-112_GP 3 Blatt Gehäuse Oberteil	AP Approved
Geob112_GP-4bl	00	DF-112_GP 4 Blatt Gehäuse Oberteil	AP Approved
Geob380-4bl-01	01	Gehäuse-Oberteil 4 Blatt DF-380	AP Approved
Geob64-2bl-02	06	VP-64 2 Blatt Gehäuse Oberteil	AP Approved
Geob64-3bl-02	07	VP-64 3 Blatt Gehäuse Oberteil	AP Approved
Geob76-2bl-01	07	VP-76 2 Blatt Gehäuse Oberteil	AP Approved
Geob76-3bl-01	05	VP-76 3 Blatt Gehäuse Oberteil	AP Approved
Geut104-3bl-02	03	VP-104 3 Blatt Gehäuse Unterteil	AP Approved
Geut112_GP-3bl	00	DF-112_GP 3 Blatt Gehäuse Unterteil	AP Approved
Geut112_GP-4bl	00	DF-112_GP 4 Blatt Gehäuse Unterteil	AP Approved
Geut112_SD-4bl	00	DF-112_SD 4 Blatt Gehäuse Unterteil SD	AP Approved
Geut112-3bl	01a	DF-112_GP/SD 3 Blatt Gehäuse Untert. SD	AP Approved
Geut380-4bl-Sundin	01	Gehäuse-Unterteil 4 Blatt DF-380	AP Approved
Geut64-2bl-01	06a	VP-64 2 Blatt Gehäuse Unterteil	AP Approved
Geut64-3bl-01	07a	VP-64 3 Blatt Gehäuse Unterteil	AP Approved
Geut76-2bl-01	06a	VP-76 2 Blatt Gehäuse Unterteil	AP Approved
Geut76-3bl-01	05a	VP-76 3 Blatt Gehäuse Unterteil	AP Approved
GP112-20_24-01	2020-02-13	Flügelkontur DF-112 / dia. 20-24"	AP Approved
GP112-20-06a_DNV	01	Assembly_Exploded_GP-112-3bl	AP Approved
GP112-24-01	2020-11-19	Flügelkontur DF-112 / dia. 24"	AP Approved
Hub-25_VP64-04a	06a	Hub-25 VP-64	AP Approved

Hub-30_VP64-03	05a	Hub-30 VP-64	AP Approved
Hub-30_VP76-02	04a	Hub-30 VP-76	AP Approved
Hub-45_VP104-02	02/GL	Hub-45 VP-104	AP Approved
Kappe DF-380-00	01	Kappe DF-380	FI For Inf.
Nabe DF-380-01	01	Nabe DF-380	AP Approved
NabeDF112-02	04	Nabe DF-112	AP Approved
PropNut DF-380-00	00	Prop.-Nut DF-380	FI For Inf.
Puller DF-380-00	00	Abzieher f. DF-380	DI Discarded**
VP104_Flg-20-01_flat	2009-02-11	Blade VP-104 20"	AP Approved
VP104_Flg-26-01_flat	2009-04-15	Blade VP-104 26"	AP Approved
VP64_Flg-13-03_flat	2008-05-16	Blade VP-64 13"	AP Approved
VP64_Flg-18-03_flat	2008-05-16	Blade VP-64 18"	AP Approved
VP76_Flg-17-01_flat	2008-06-10	Blade VP-76 17"	AP Approved
VP76_Flg-22-01_flat	2008-06-25	Blade VP-76 22"	AP Approved

Tests carried out

None.

Marking of product

Manufacturer's name or trademark. Type number designation.

Periodical assessment

For retention of the Type Approval, a DNV GL surveyor shall perform an assessment after 2 years and after 3.5 years to verify that the conditions of the type approval are complied with. A renewal assessment will be performed at renewal of the certificate.

The objective of the Periodical Assessment is to verify that the conditions for the Type Approval are not altered since the Type Approval Certificate was issued. The main scope of the Periodical Assessment will normally include:

- Verification of the Type Approval applicant's production and quality system w.r.t. ensuring continued consistent production of the Type Approved products at the Type Approval applicant's own premises and at other companies that are given the responsibility for manufacturing of the products
- Review of the Type Approval documentation and that this is still used as basis for the production
- Review of possible changes to the design, the material and the performance of the product
- Verification of the product marking

In cases where the Type Approved product is manufactured at other companies, the Periodical Assessment shall verify that the Type Approval applicant has a quality control system for consistent production at their licensees/subcontractors. Furthermore Periodical Assessment shall be carried out randomly at these companies.

When a Type Approved product is manufactured at other companies, the Type Approval applicant takes the sole responsibility for the conformity of the product to the applicable requirements.

END OF CERTIFICATE.

NOTES

APPROVED PRODUCT
DNV·GL
DNVGL.COM/AF

OnlineShop

VARIPROP
FEATHERING PROPELLERS

Made in Germany

Westkai 58 | 27572 Bremerhaven
Telefon +49 (0) 471 - 7 70 47
Telefax +49 (0) 471 - 7 74 44
info@spw-gmbh.de
www.spw-gmbh.de | www.VARIPROP.de

SPW GmbH
SAIL PROPELLER- UND WELLENBAU